Part No. WFIL-H8000-40000F

8-40GHz Highpass Filter/2.92mm



Features:

- Low VSWR
- Low Insertion Loss
- High Performance

RoHS Compliant

Electrical Specification	
Pass Band Frequency	8-40GHz
Description	Highpass Filter
Insertion Loss	3.6dB max.
VSWR	2.5:1 max.
Rejection	DC-7.5GHz: 60 dB min.
Impedance	50 Ohm
Power Handling	5W
Connector Type	2.92mm Female

Environmental Specification	
Operating Temperature	0~+50℃

Outline

Unit:mm

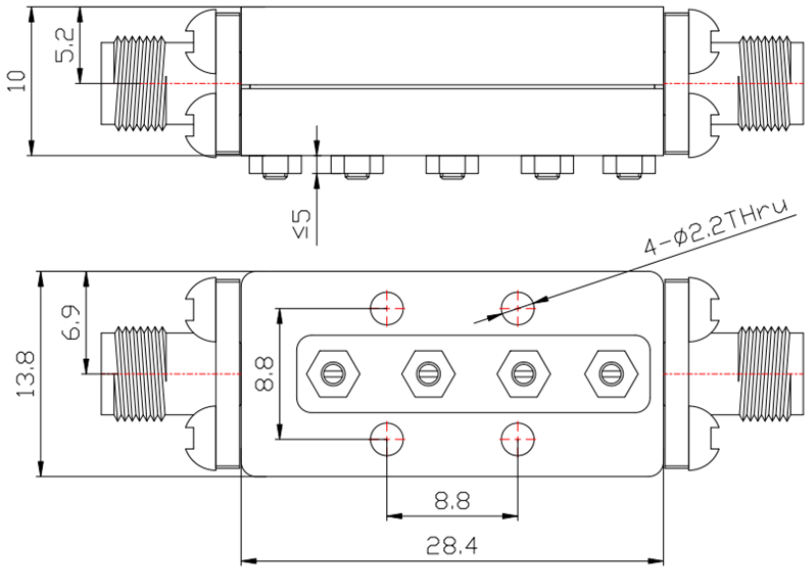

Test Curve

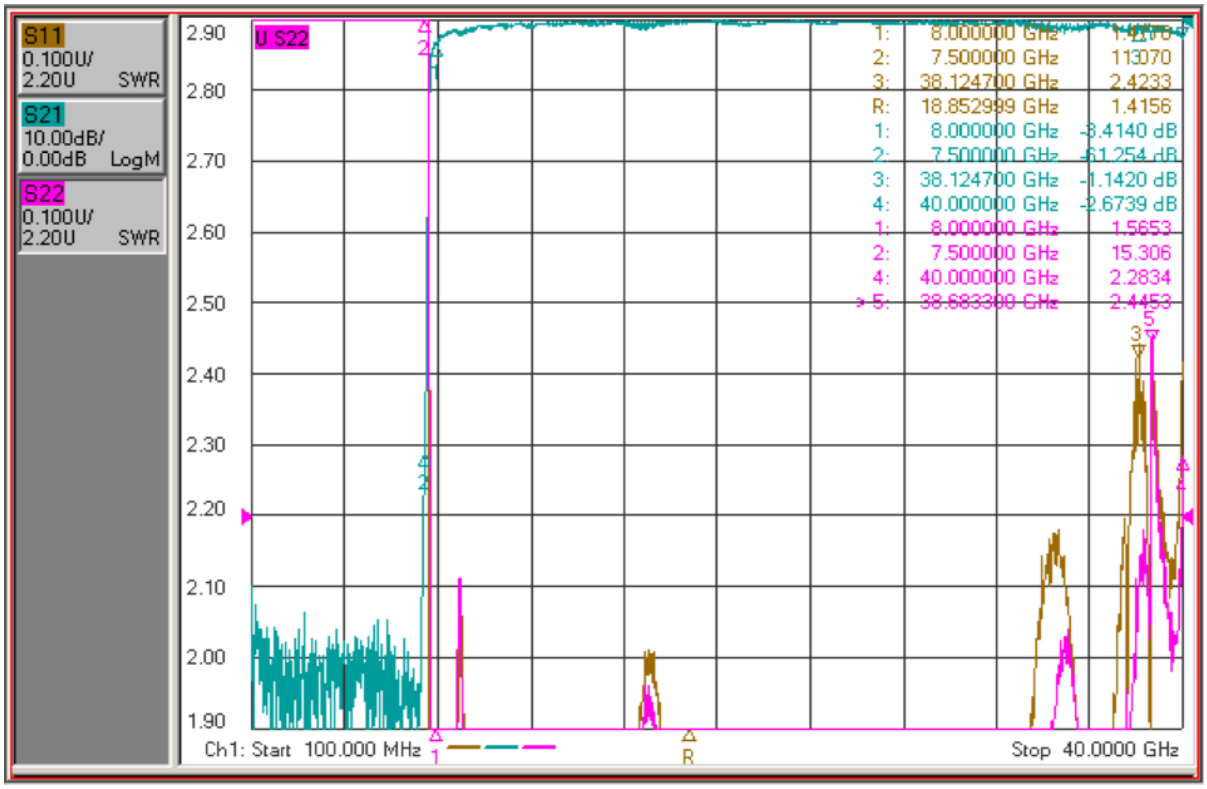
S11
0.100U/
2.20U SWR
S21
10.00dB/
0.00dB LogM
S22
0.100U/
2.20U SWR
U S22
2.90
2.80
2.70
2.60
2.50
2.40
2.30
2.20
2.10
2.00
1.90
1: 8.000000 GHz
2: 7.500000 GHz 113070
3: 38.124700 GHz 2.4233
R: 18.852999 GHz 1.4156
1: 8.000000 GHz -3.4140 dB
2: 7.500000 GHz -61.254 dB
3: 38.124700 GHz -1.1420 dB
4: 40.000000 GHz -2.6739 dB
1: 8.000000 GHz 1.5653
2: 7.500000 GHz 15.306
4: 40.000000 GHz 2.2834
5: 38.683300 GHz 2.4453
Ch1: Start 100.000 MHz
Stop 40.0000 GHz