Part No. WFIL-H1200-18000F

1.2-18GHz Highpass Filter/SMA



Features:

- Low VSWR
- Low Insertion Loss
- High Performance

RoHS Compliant

Electrical Specification	
Pass Band Frequency	1.2-18GHz
Description	Highpass Filter
Insertion Loss	2.5dB max.
Return Loss	9.5dB min.
Rejection	DC-1GHz : 60dB min.
Impedance	50 Ohm
Power Handling	10W
Connector Type	SMA

Environmental Specification	
Operating Temperature	0~+55℃

Outline

Unit:mm

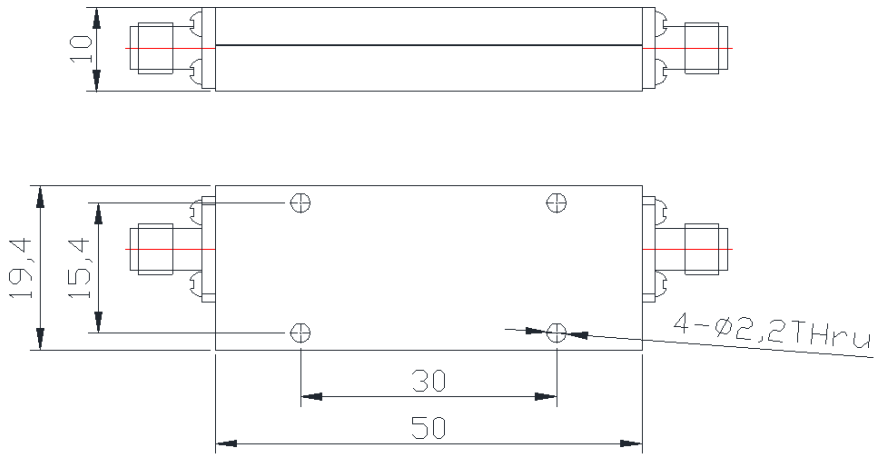

Test Curve

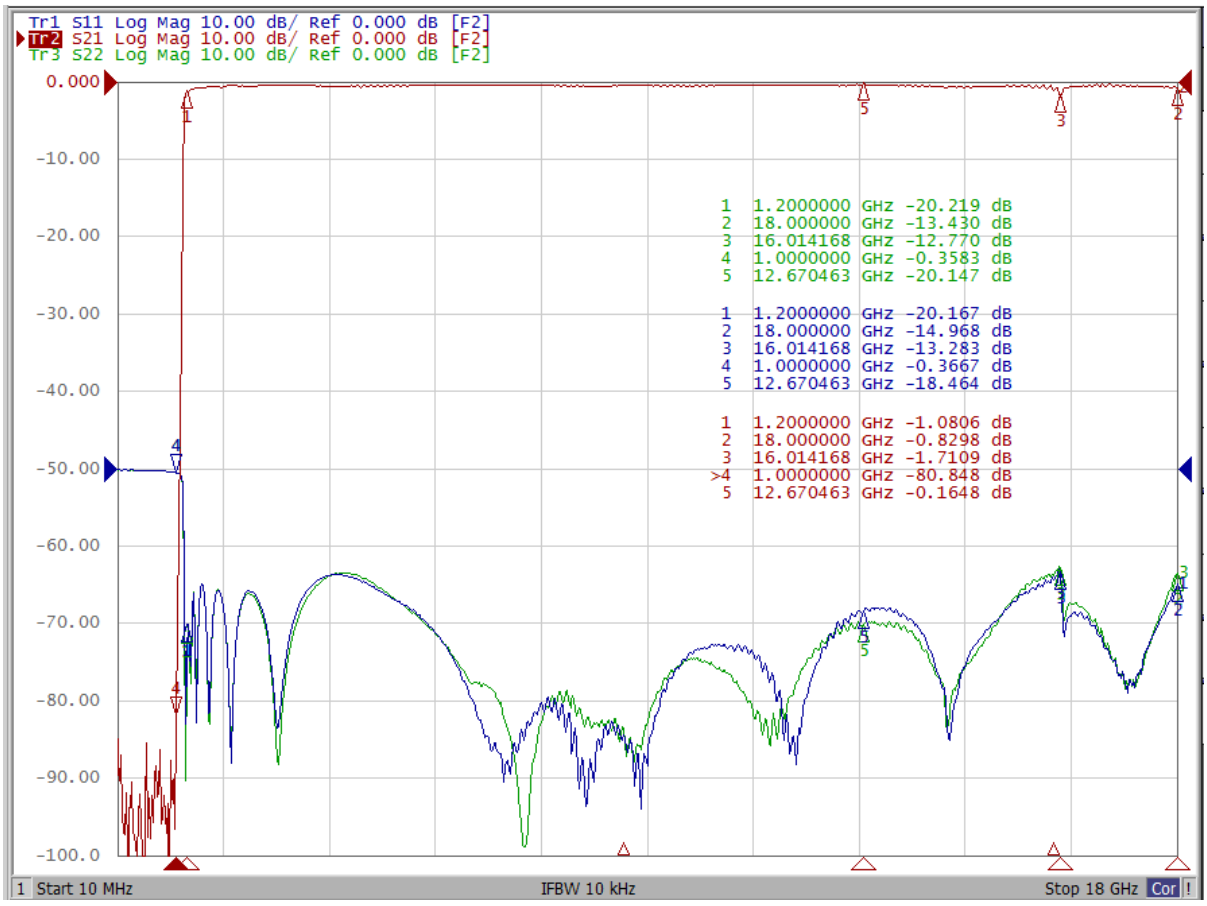
Tr1 S11 Log Mag 10.00 dB/ Ref 0.000 dB [F2]
Tr2 S21 Log Mag 10.00 dB/ Ref 0.000 dB [F2]
Tr3 S22 Log Mag 10.00 dB/ Ref 0.000 dB [F2]
0.000
-10.00
-20.00
-30.00
-40.00
-50.00
-60.00
-70.00
-80.00
-90.00
-100.0
1 1.2000000 GHz -20.219 dB
2 18.000000 GHz -13.430 dB
3 16.014168 GHz -12.770 dB
4 1.0000000 GHz -0.3583 dB
5 12.670463 GHz -20.147 dB
1 1.2000000 GHz -20.167 dB
2 18.000000 GHz -14.968 dB
3 16.014168 GHz -13.283 dB
4 1.0000000 GHz -0.3667 dB
5 12.670463 GHz -18.464 dB
1 1.2000000 GHz -1.0806 dB
2 18.000000 GHz -0.8298 dB
3 16.014168 GHz -1.7109 dB
>4 1.0000000 GHz -80.848 dB
5 12.670463 GHz -0.1648 dB
1 Start 10 MHz
IFBW 10 kHz
Stop 18 GHz
Cor